WIRING DIAGRAM

Section 3 (39)
S80 75th Anniversary Edition
2002

TP 3968202

Contents
Abbreviations

This manual covers functions specific to the S80 75th Anniversary Edition 2002.
Wiring Diagram S60/S80 2002 Service Manual can be used for the electrical system in general.

Contents 1
Abbreviations 1
How to use the wiring diagram 2

Electrical distribution
Overview 4

Fuses
Cargo compartment 11E/1-7 6
Cargo compartment 11F/1-10 7
Relays/Shunts 7

Ground connection
31/3 - 31/93 8

Group 35
Instrument and control lighting 9

Group 36
12V outlet 10

Group 39
Road Traffic Information module (RTI) with Voice Guide Amplifier module (VGA) 11

Group 85
Heated rear seats 13

Group 87
Cooler, rear seat 14

Group 88
Power sun shade 15

Cable harness routing in vehicle
Rear Seat Entertainment (RSE) 16
Rear seat 17

Component illustrations
2/43 - 9/24 18
9/37 - 16/83 19
16/122 - 54/36 20

List of components
1/1 - 54 /no 21

Abbreviations

Groups

Group 35	= Lighting
Group 36	= Additional electrical equipment
Group 39	= Other
Group 85	= Interior equipment
Group 87	= Climate controls
Group 88	= Internal equipment

Ignition switch symbols

X	= Accessories (audio position)
S	= Powered upon insertion of key
15	= The switch remains connected during start
15l	= Contact is broken while starting
30	= Constant power from the battery
50	= Start

Other

AMP	= Amplifier
LH	= Left-hand side
W/O	= Without

Colors

BL	= Blue
BN	= Brown
GN	= Green
GR	= Gray
OR	= Orange
P	= Pink
R	= Red
SB	= Black
VO	= Violet
W	= White
Y	= Yellow

Order number TP 3968202

Volvo retains the right to make amendments

Contents
Abbreviations

This manual covers functions specific to the S80 75th Anniversary Edition 2002.
Wiring Diagram S60/S80 2002 Service Manual can be used for the electrical system in general.

Contents 1
Abbreviations 1
How to use the wiring diagram 2

Electrical distribution
Overview 4

Fuses
Cargo compartment 11E/1-7 6
Cargo compartment 11F/1-10 7
Relays/Shunts 7

Ground connection
31/3 - 31/93 8

Group 35
Instrument and control lighting 9

Group 36
12V outlet 10

Group 39
Road Traffic Information module (RTI) with Voice Guide Amplifier module (VGA) 11

Group 85
Heated rear seats 13

Group 87
Cooler, rear seat 14

Group 88
Power sun shade 15

Cable harness routing in vehicle
Rear Seat Entertainment (RSE) 16
Rear seat 17

Component illustrations
2/43 - 9/24 18
9/37 - 16/83 19
16/122 - 54/36 20

List of components
1/1 - 54 /no 21

Abbreviations

Groups

Group 35	= Lighting
Group 36	= Additional electrical equipment
Group 39	= Other
Group 85	= Interior equipment
Group 87	= Climate controls
Group 88	= Internal equipment

Ignition switch symbols

X	= Accessories (audio position)
S	= Powered upon insertion of key
15	= The switch remains connected during start
15l	= Contact is broken while starting
30	= Constant power from the battery
50	= Start

Other

AMP	= Amplifier
LH	= Left-hand side
W/O	= Without

Colors

BL	= Blue
BN	= Brown
GN	= Green
GR	= Gray
OR	= Orange
P	= Pink
R	= Red
SB	= Black
VO	= Violet
W	= White
Y	= Yellow

Order number TP 3968202

Volvo retains the right to make amendments

Electrical distribution
Overview

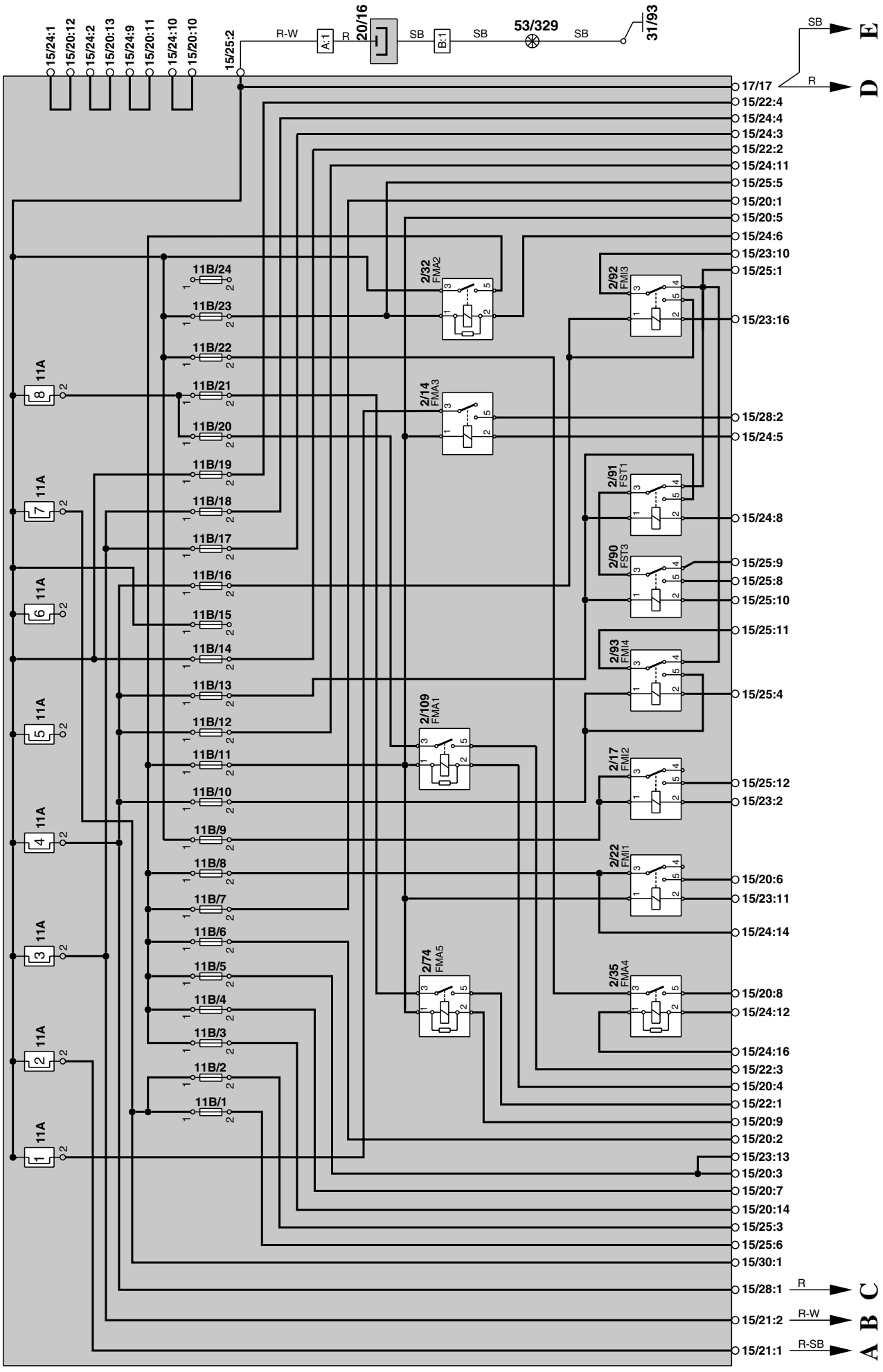

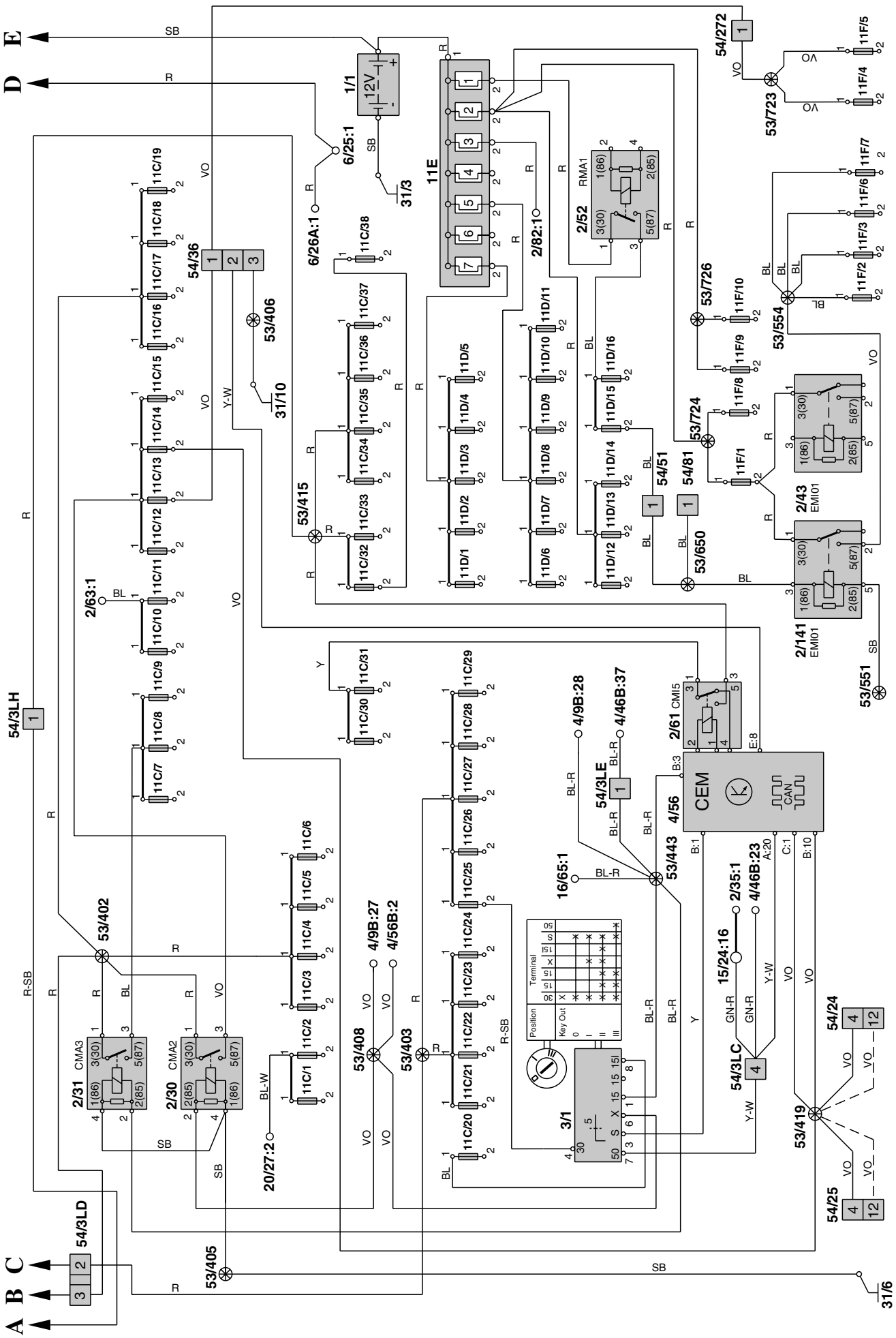
A
B
C
D
E
54/3LH
54/3LD
53/405
53/402
2/31
CMA3
2/30
CMA2
20/27:2
53/408
53/403
4/9B:27
4/56B:2
53/415
53/406
54/36
31/10
6/26A:1
6/25:1
1/1
12V
31/3
11E
2/82:1
2/52
RMA1
53/726
53/724
54/51
54/81
53/650
2/43
EMI01
2/141
EMI01
53/554
53/723
54/272
53/551
2/61
CMI5
4/9B:28
4/46B:37
54/3LE
4/56
CEM
CAN
53/443
16/65:1
2/35:1
4/46B:23
15/24:16
54/3LC
3/1
Position
Terminal
Key Out
54/24
53/419
54/25
31/6
2/63:1

Fuses
Cargo compartment 11E/1-7

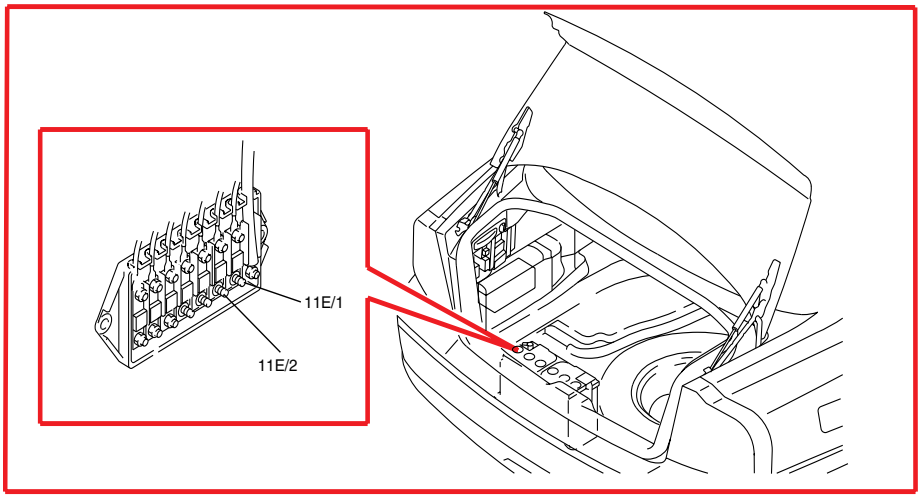

11E Fuses by the battery

No.	Fuse function	A
1	Fuse protection for 11D/15-18 via 2/52	40
2	Fuse protection for 11D/12-14 Fuse protection for 11F/1 Fuse protection for 11F/8 Fuse protection for 11F/9-10	40
3	Heated rear window 9/2 via 2/82	40
5	Fuse protection for 11D/6-11	40
7	Fuse protection for 11D/1-5	40

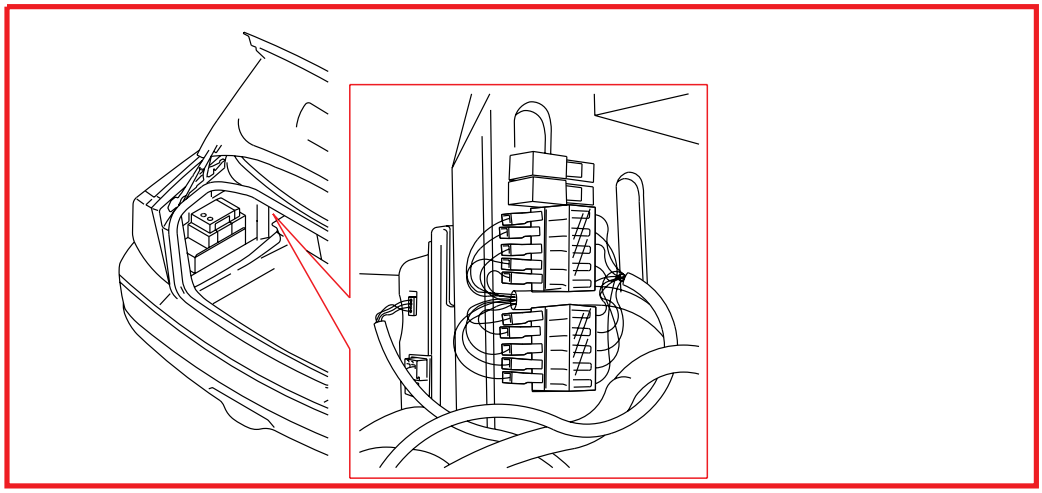

11F Fuses in rear seat cargo compartment

No.	Fuse function	A
1	Relay 15I feed 2/141 Right-hand heated rear seat 9/14 via 2/43 Left-hand heated rear seat 9/15 via 2/43	25
2	Switch, heated rear seat 3/64	5
3	Sun shade control module 4/55	10
4	12V outlet, rear seat 17/21	10
5	Switch, heated rear seat 3/64 Sun shade switch 3/104	5
6	Cooler, rear seat 9/24	10
7	Horn 16/83	5
8	Rear Seat Entertainment module (RSE) 16/124	5
9	M2D control module 8/80 Voice Guide Amplifier module (VGA) 16/83 Rear Audio Separation module (RAS) 16/122	15

Relays/Shunts in rear seat cargo compartment

Pos	Relay function
1	Heated rear seat relay 2/43
2	Relay 15I feed 2/141

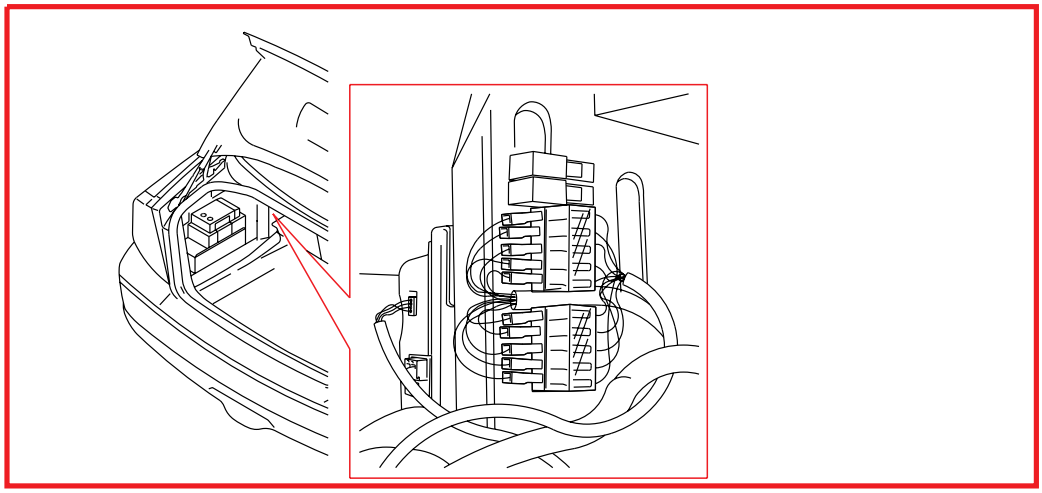

11F Fuses in rear seat cargo compartment

No.	Fuse function	A
1	Relay 15I feed 2/141 Right-hand heated rear seat 9/14 via 2/43 Left-hand heated rear seat 9/15 via 2/43	25
2	Switch, heated rear seat 3/64	5
3	Sun shade control module 4/55	10
4	12V outlet, rear seat 17/21	10
5	Switch, heated rear seat 3/64 Sun shade switch 3/104	5
6	Cooler, rear seat 9/24	10
7	Horn 16/83	5
8	Rear Seat Entertainment module (RSE) 16/124	5
9	M2D control module 8/80 Voice Guide Amplifier module (VGA) 16/83 Rear Audio Separation module (RAS) 16/122	15

Relays/Shunts in rear seat cargo compartment

Pos	Relay function
1	Heated rear seat relay 2/43
2	Relay 15I feed 2/141

Ground connection
31/3 - 31/93

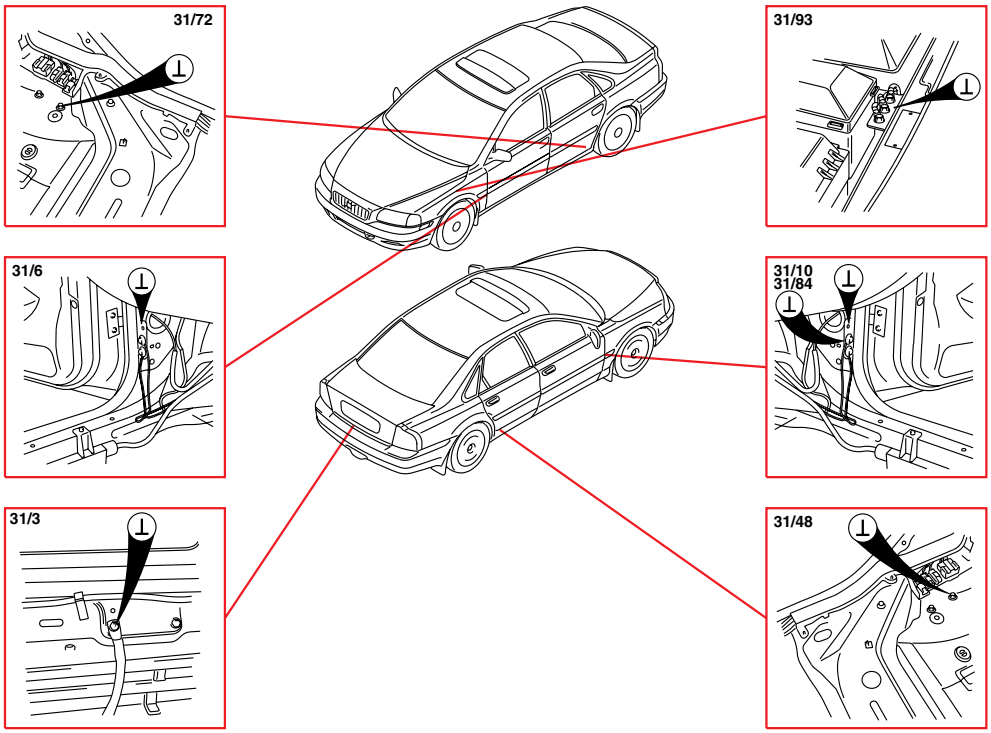

31/3
Battery 1/1

31/6
Junction point 53/405 -X feed overload relay 2/30:4 -15-feed overload relay 2/31:4

31/10
Junction point 53/406 -front 12V outlet 9/1:2 -12V outlet 75th Anniversary Edition 9/37 -12V outlet rear seat 17/21:1

31/48
Junction point 53/550 -cooler, rear seat 9/24:3 -sun shade control module 4/55A:1 -right-hand heated rear seat 9/14:1 -left-hand heated rear seat 9/15:1 -junction point 53/551
Junction point 53/551 -relay 15l feed 2/141:5 -sun shade switch 3/104:2 -switch, heated rear seat 3/64:5 -heated rear seat relay 2/43:5

31/72
Junction point 53/602 -control module, RTI system 16/45D:5
Voice Guide Amplifier module (VGA) 16/83B:11
Junction point 53/555 -Rear Audio Separation module (RAS) 16/122:13 -TV receiver 16/36A:15 -M2D control module 8/80A:13 -Rear Seat Entertainment module (RSE) 16/124:2 -Rear Seat Entertainment module (RSE) 16/124:12

31/84
Junction point 53/448 -junction point 53/423 RTI -RTI display 16/46A:4 -RTI display 16/46A:5

31/93
Junction point 53/329 -capacitor 20/16B:1

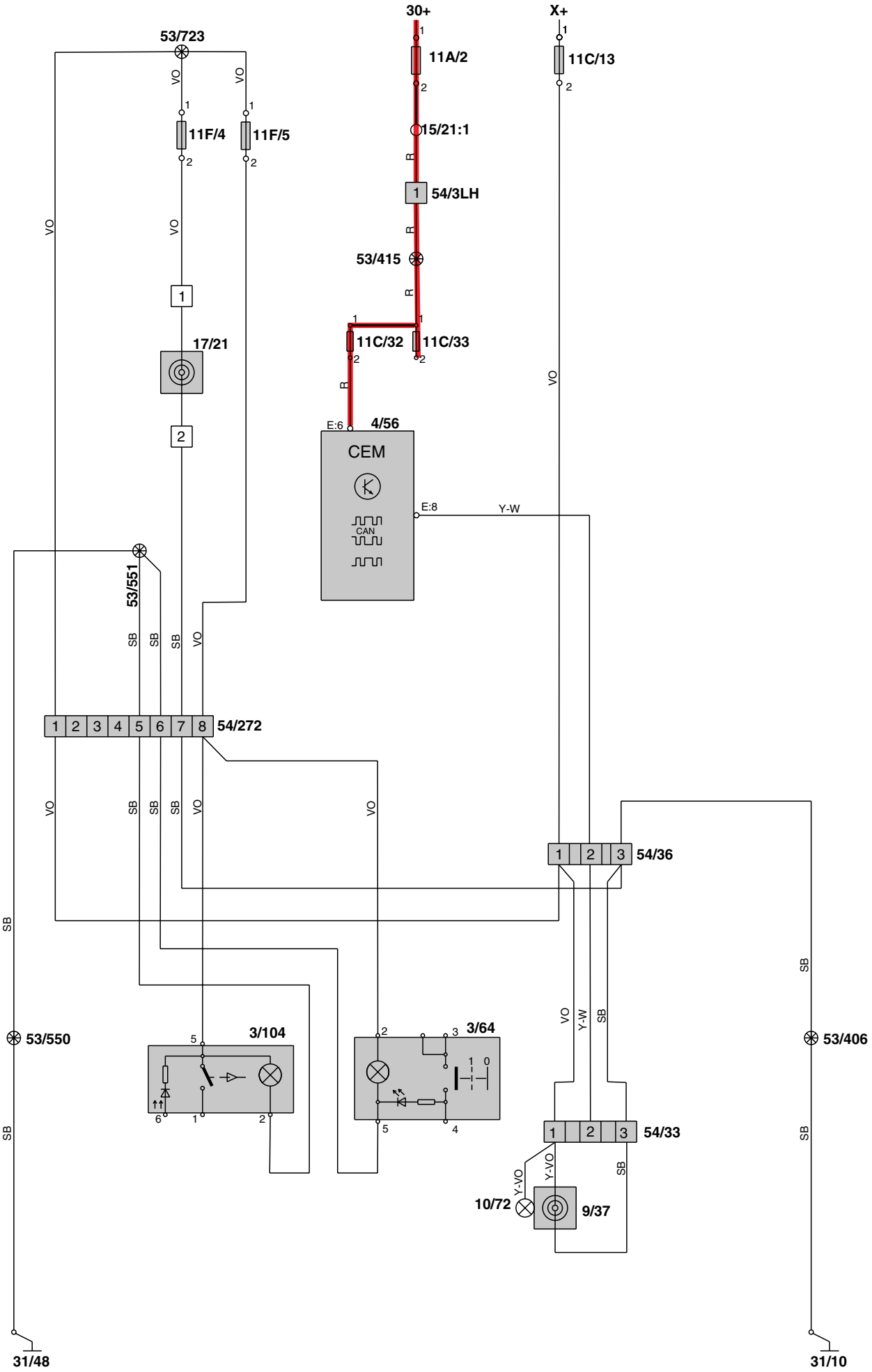
30+
X+
53/723
11A/2
11C/13
15/21:1
11F/4
11F/5
54/3LH
53/415
17/21
11C/32
11C/33
E:6
4/56
CEM
CAN
E:8
Y-W
53/551
54/272
54/36
53/550
3/104
3/64
53/406
54/33
10/72
9/37
31/48
31/10
VO
SB
R

Group 36
12V outlet

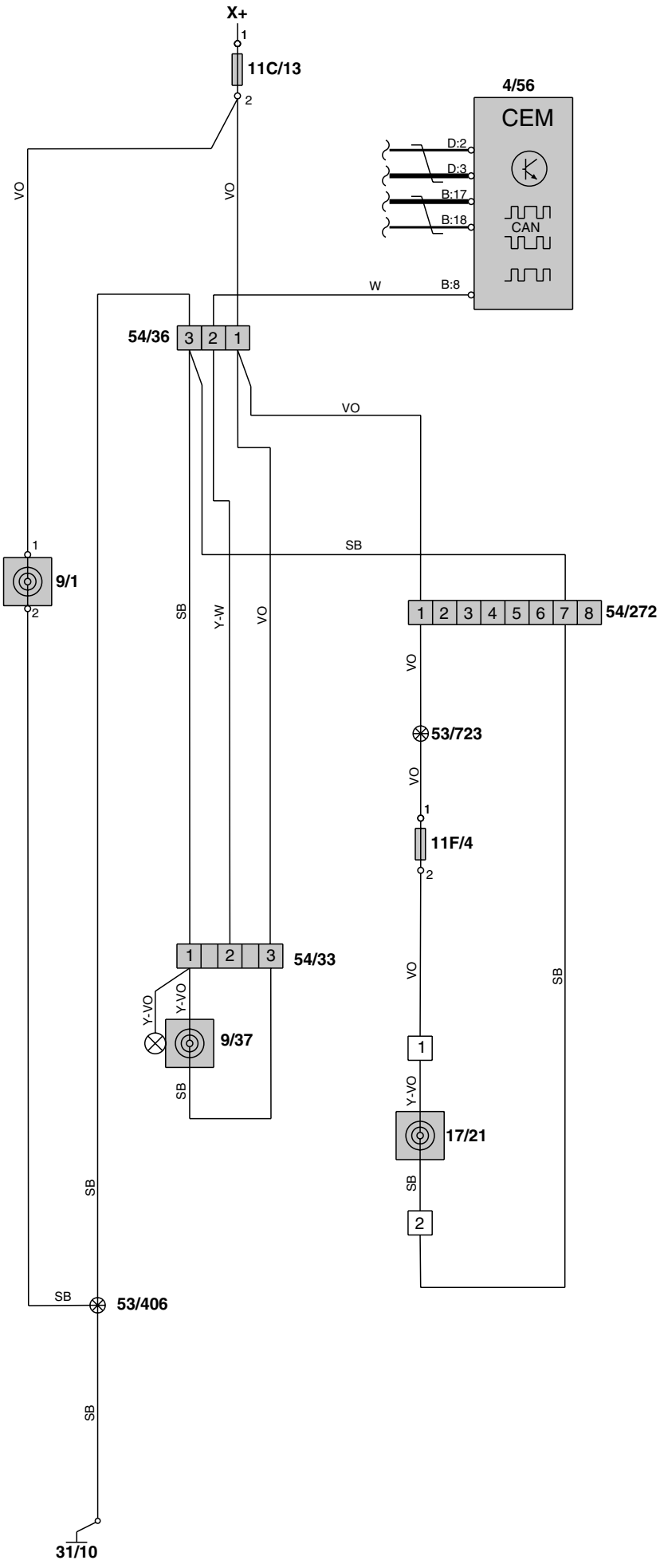

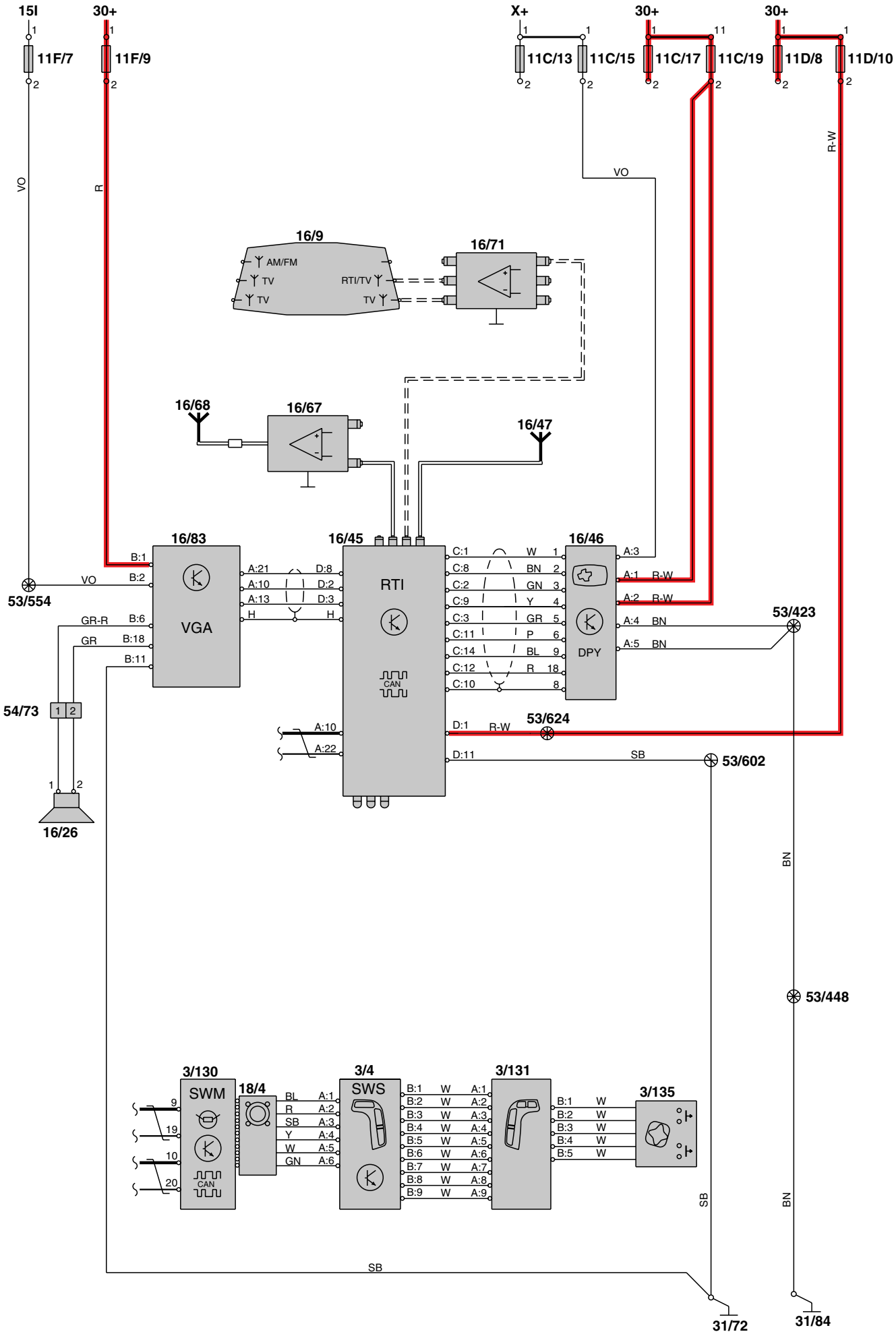
15I
30+
11F/7
11F/9
X+
30+
30+
11C/13
11C/15
11C/17
11C/19
11D/8
11D/10
VO
R
VO
R-W
16/9
AM/FM
TV
TV
RTI/TV
TV
16/71
16/68
16/67
16/47
16/83
VGA
16/45
RTI
CAN
16/46
DPY
B:1
B:2
B:6
B:18
B:11
A:21
A:10
A:13
H
D:8
D:2
D:3
H
C:1 W 1
C:8 BN 2
C:2 GN 3
C:9 Y 4
C:3 GR 5
C:11 P 6
C:14 BL 9
C:12 R 18
C:10 8
A:3
A:1 R-W
A:2 R-W
A:4 BN
A:5 BN
53/554
GR-R
GR
54/73
16/26
A:10
A:22
D:1 R-W
D:11 SB
53/624
53/602
53/423
53/448
3/130
SWM
CAN
18/4
3/4
SWS
3/131
3/135
9
19
10
20
BL A:1
R A:2
SB A:3
Y A:4
W A:5
GN A:6
B:1 W A:1
B:2 W A:2
B:3 W A:3
B:4 W A:4
B:5 W A:5
B:6 W A:6
B:7 W A:7
B:8 W A:8
B:9 W A:9
B:1 W
B:2 W
B:3 W
B:4 W
B:5 W
SB
SB
BN
BN
31/72
31/84

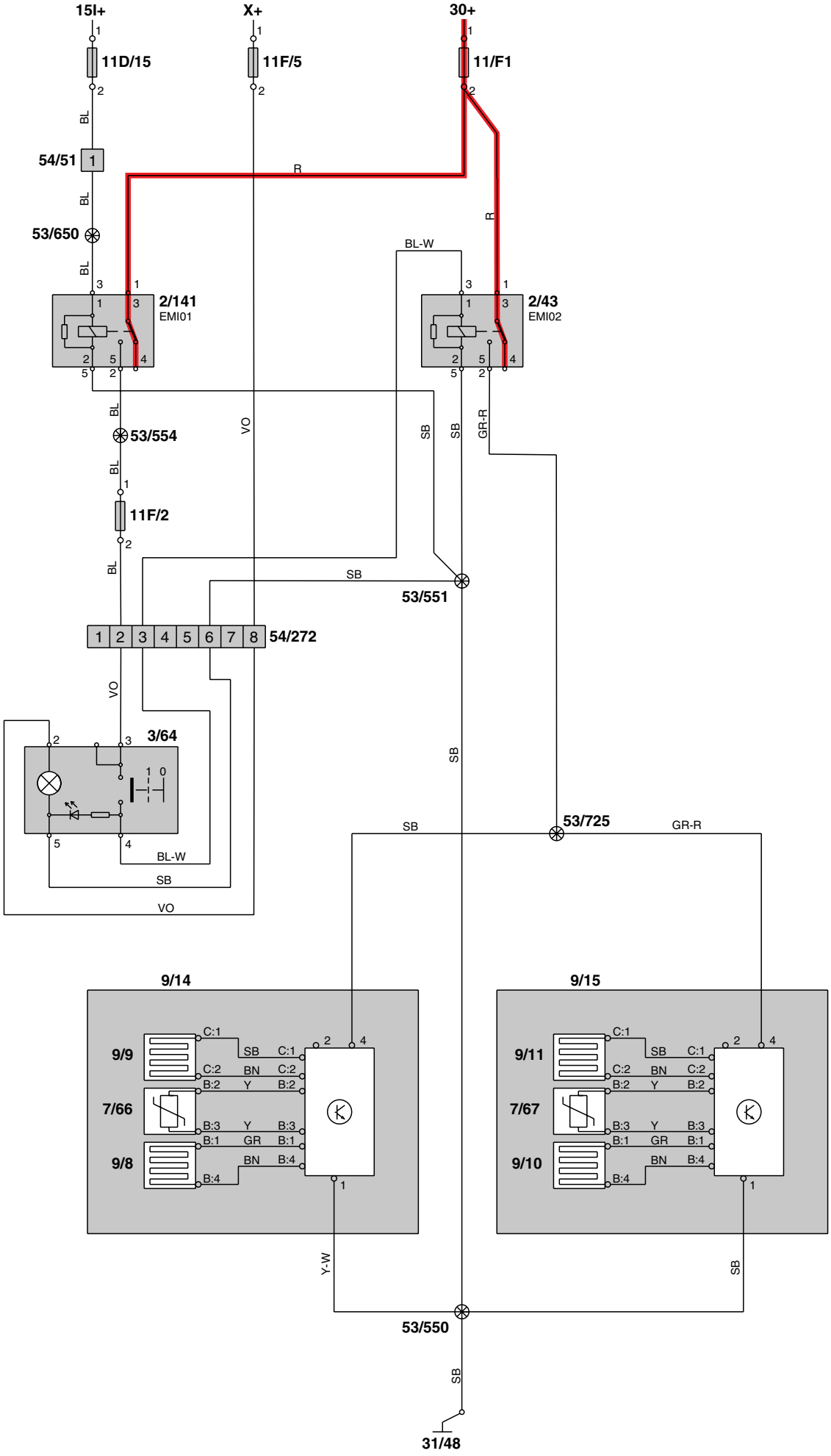
15I+
X+
30+
11D/15
11F/5
11F/1
54/51
53/650
2/141
EMI01
2/43
EMI02
53/554
11F/2
53/551
54/272
3/64
53/725
9/14
9/15
9/9
7/66
9/8
9/11
7/67
9/10
53/550
31/48
BL
R
BL-W
VO
SB
GR-R
Y-W
BN
Y
GR

Group 87
Cooler, rear seat

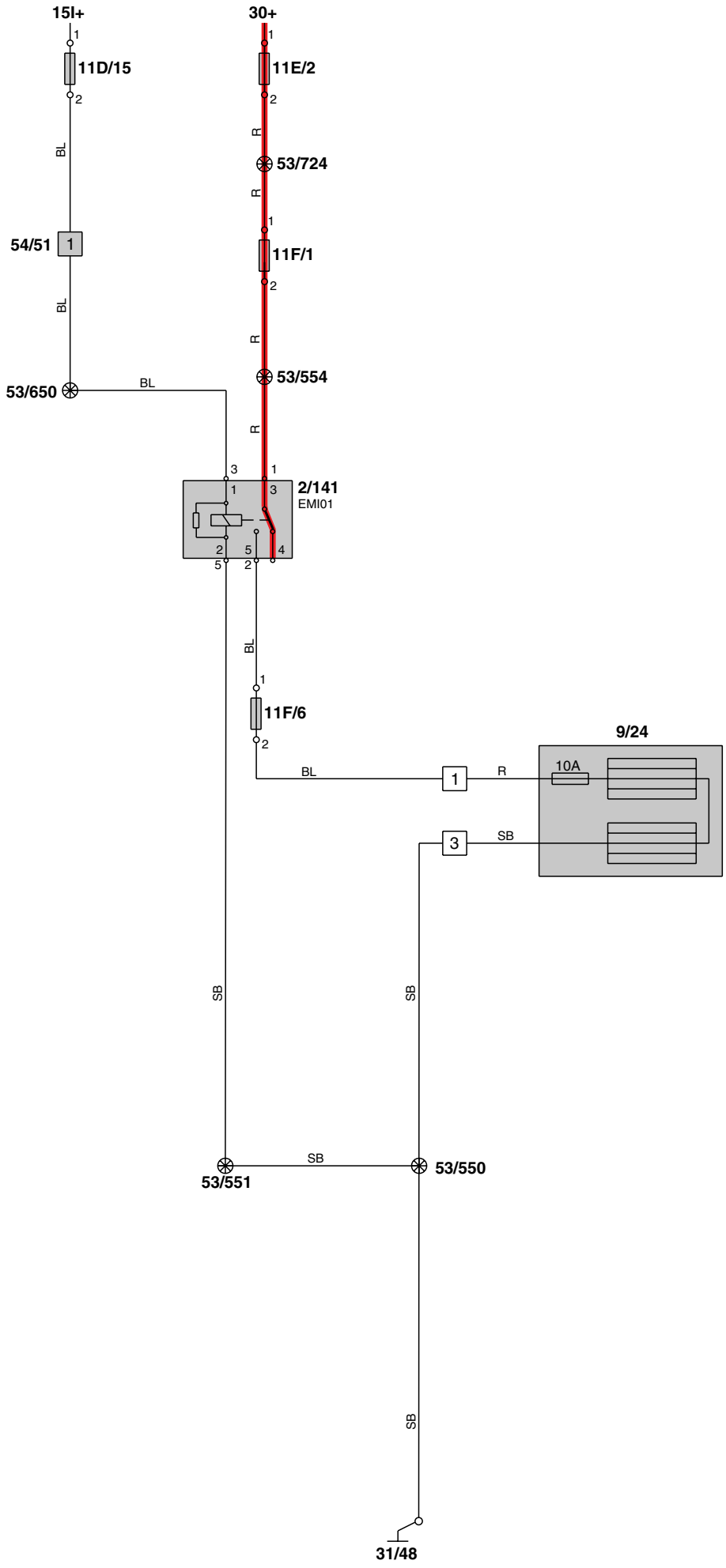

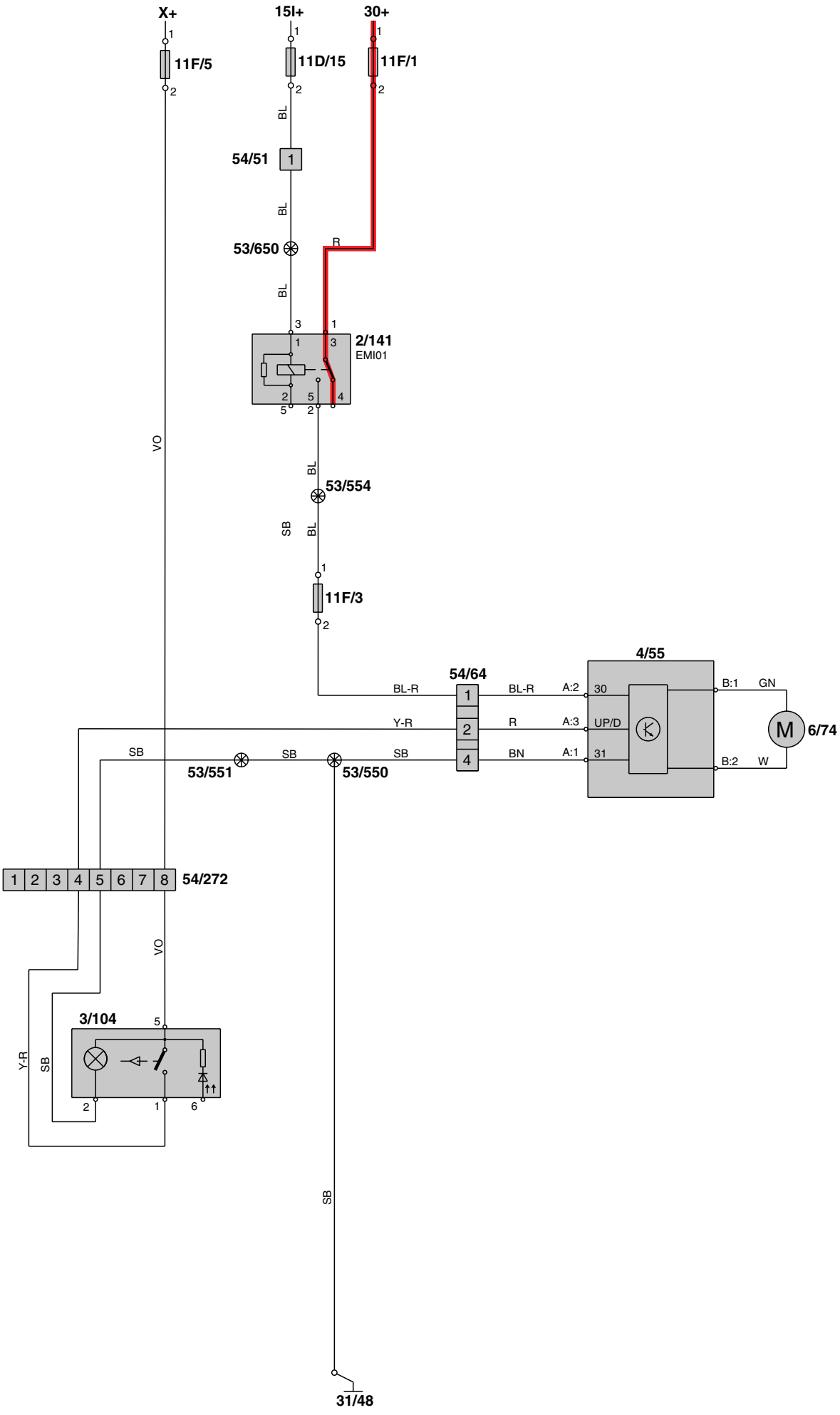
X+
15I+
30+
11F/5
11D/15
11F/1
54/51
53/650
2/141
EMI01
53/554
11F/3
4/55
54/64
53/551
53/550
M
6/74
54/272
3/104
31/48
BL
R
VO
SB
BL-R
Y-R
BN
GN
W
A:1
A:2
A:3
B:1
B:2
UP/D
30
31

Cable harness routing in vehicle
Rear Seat Entertainment (RSE)

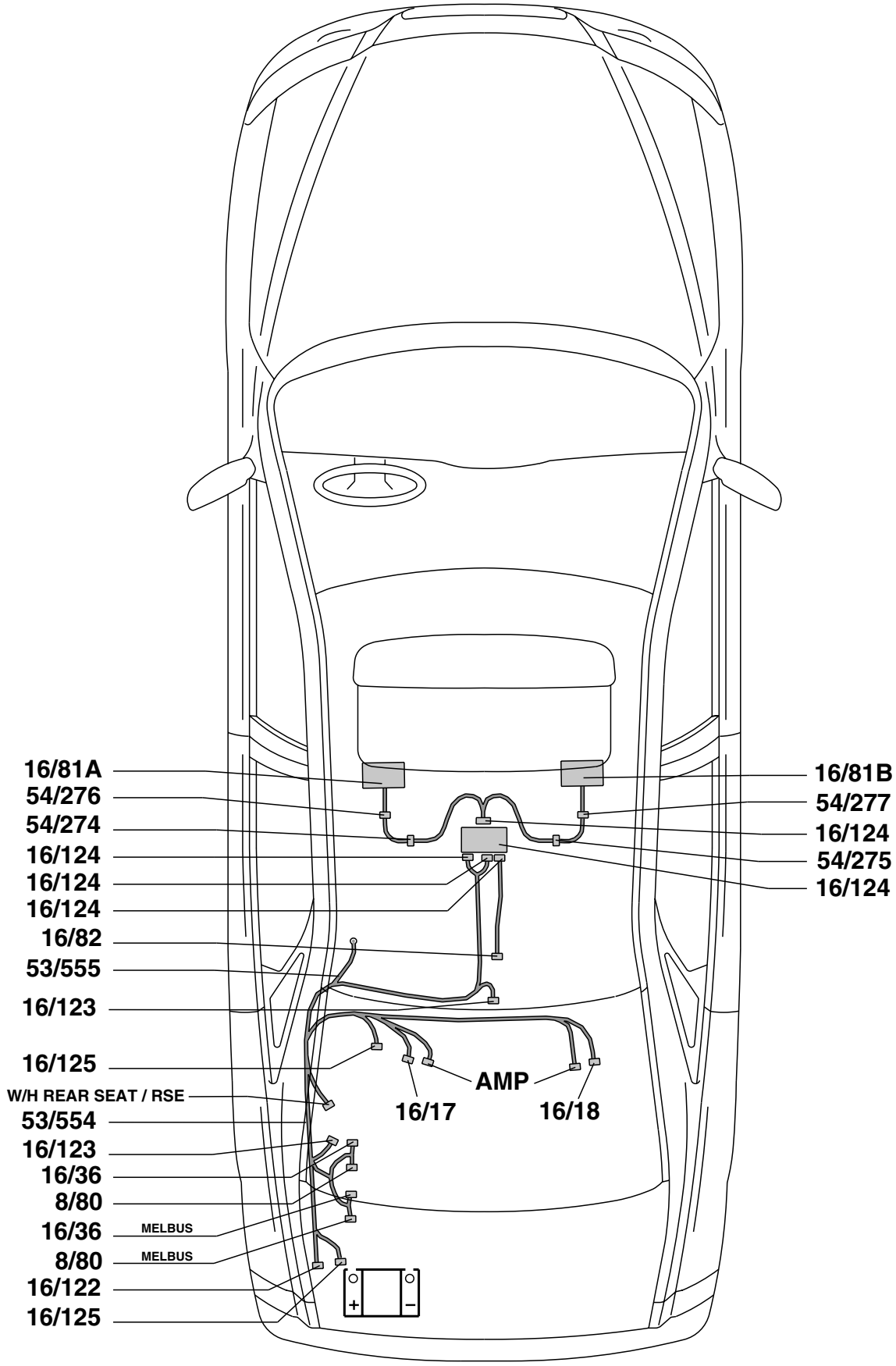

Rear Seat Entertainment (RSE)

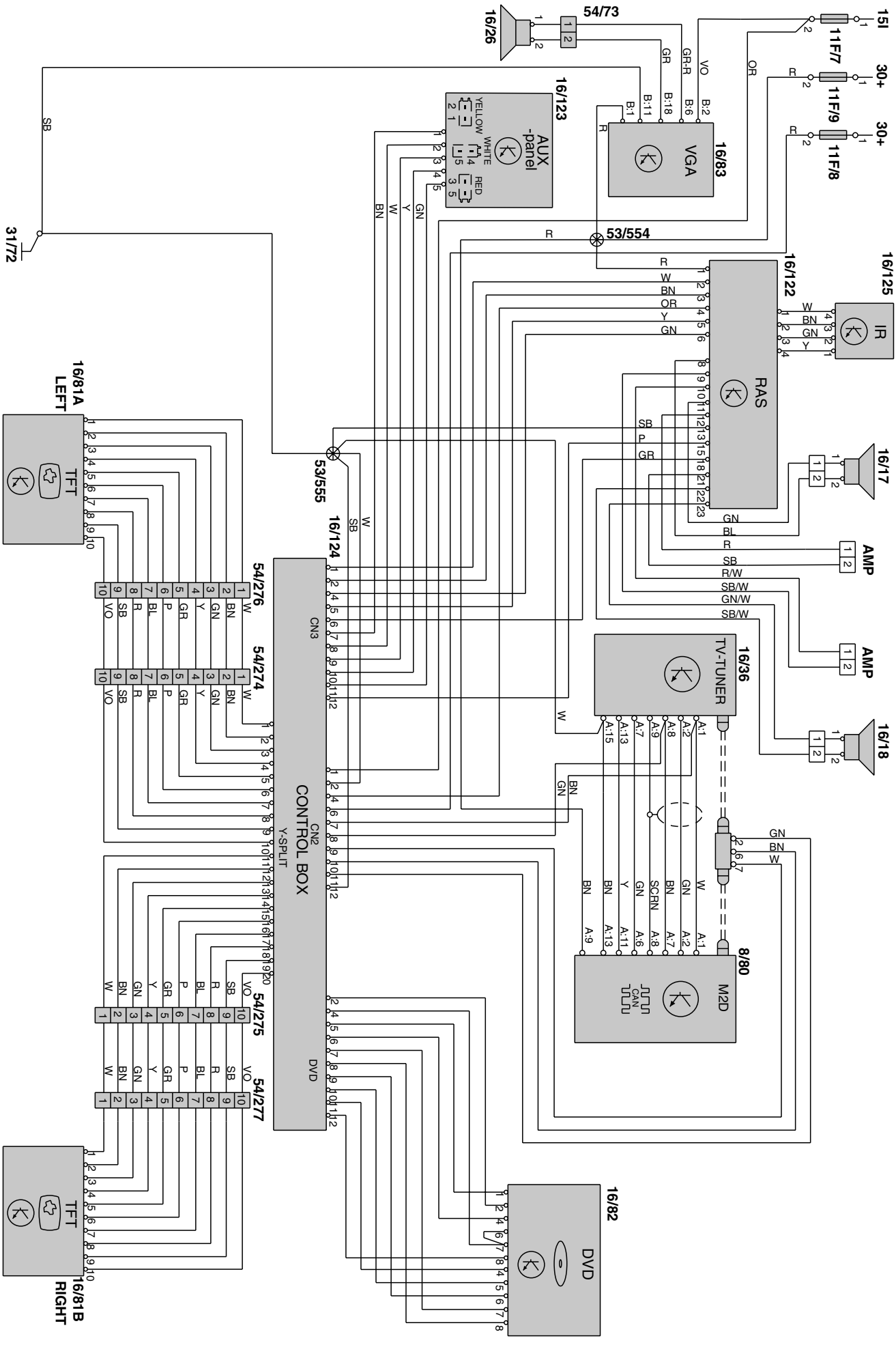

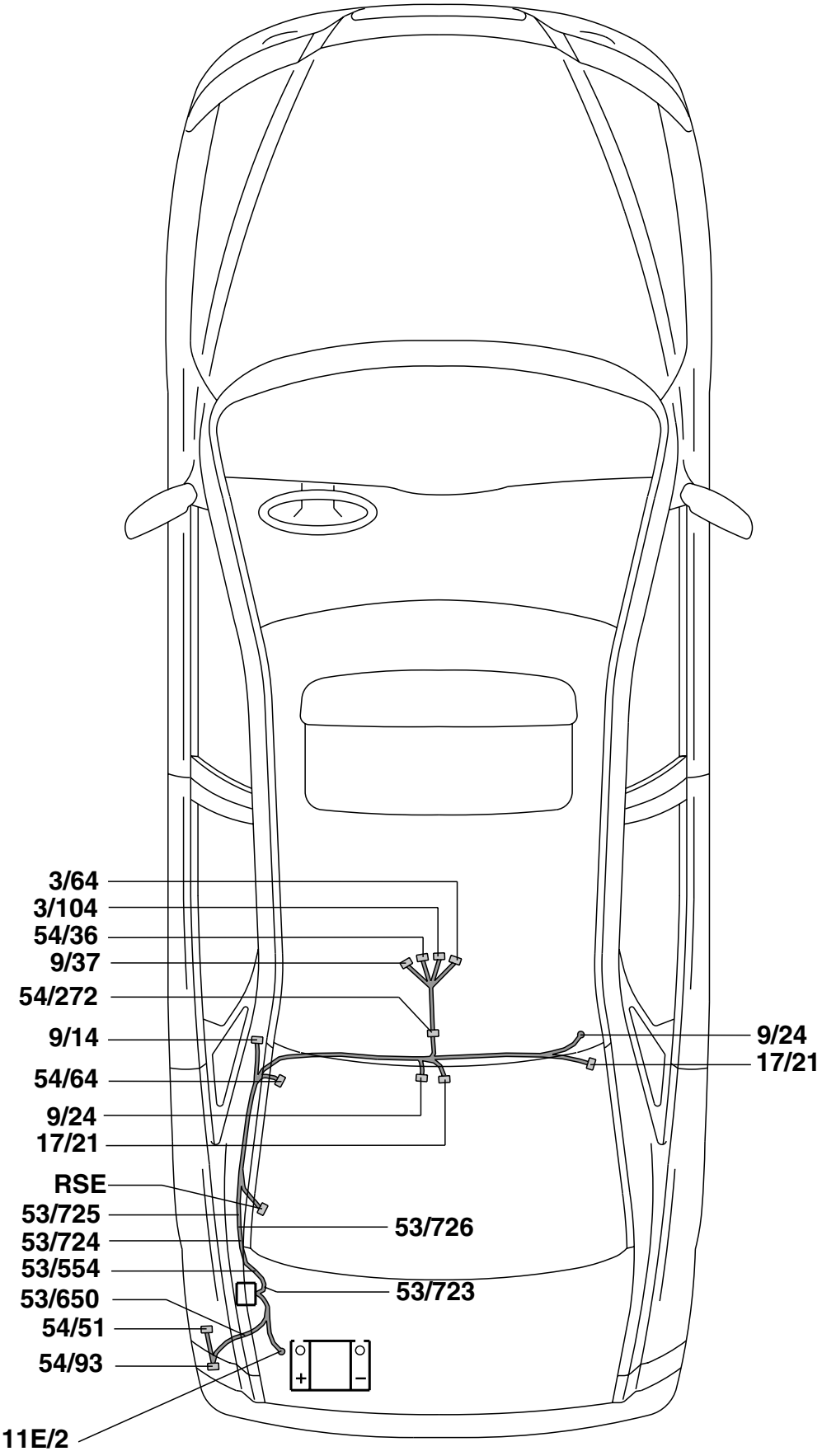
3/64
3/104
54/36
9/37
54/272
9/14
54/64
9/24
17/21
RSE
53/725
53/724
53/554
53/650
54/51
54/93
11E/2
53/726
53/723
9/24
17/21
+
–

Component illustrations
2/43 - 9/24

2/43

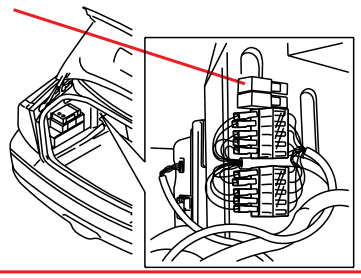

2/141

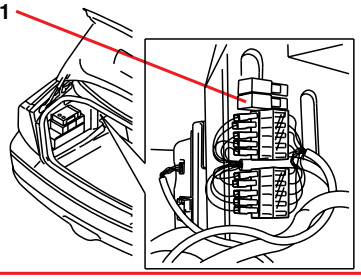

2/52

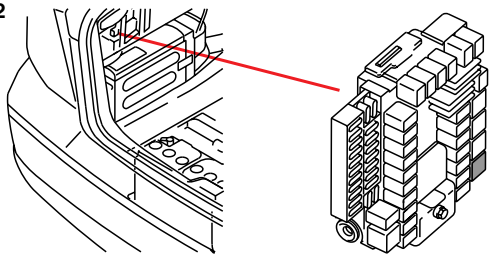

3/64

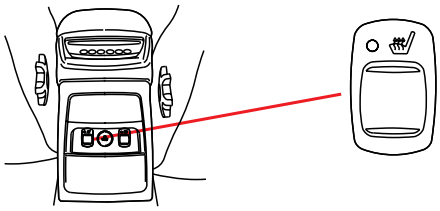

3/104

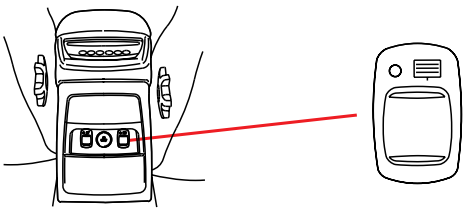

4/55
6/74

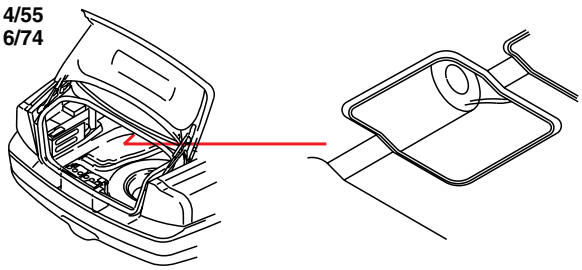

8/80

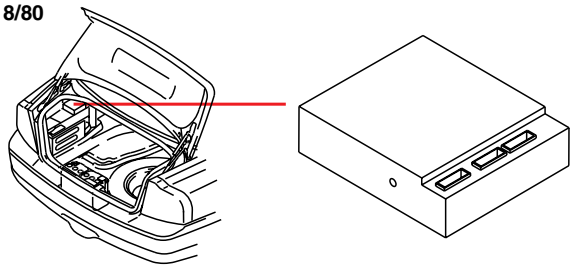

9/8

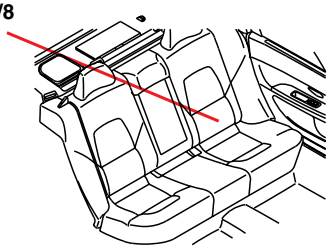

9/9

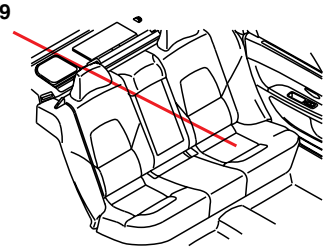

9/10

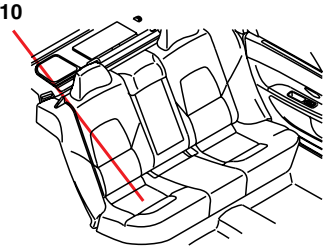

9/11

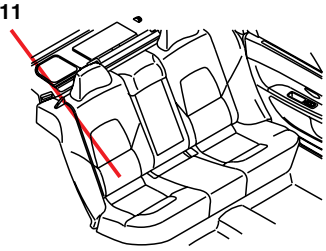

9/24

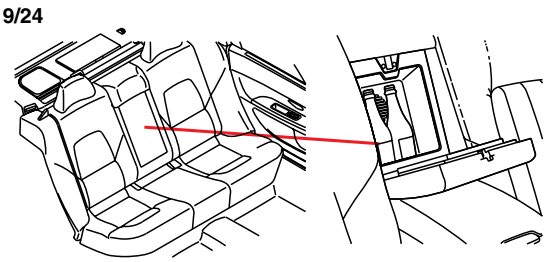

9/37

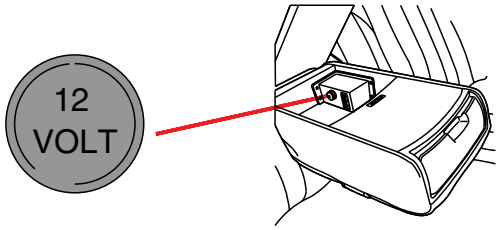

16/67

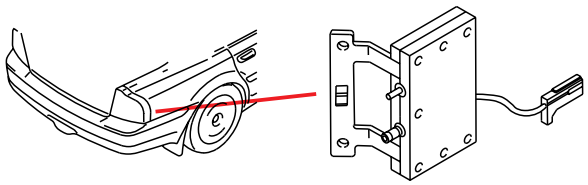

16/15

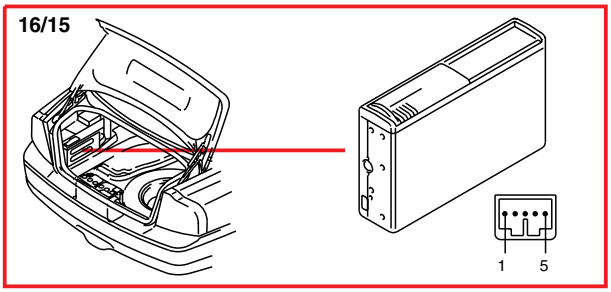

16/68

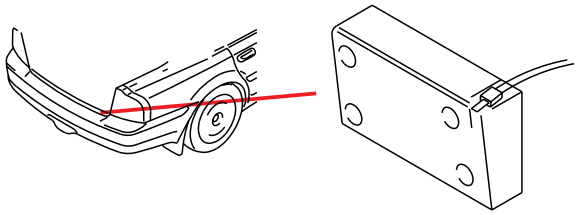

16/36

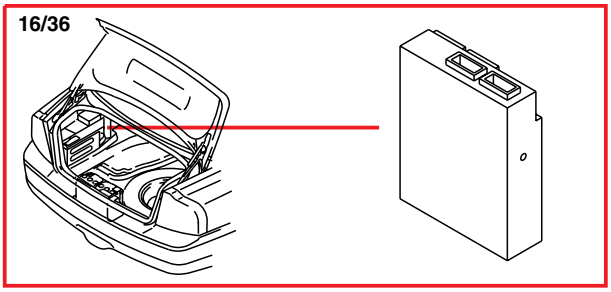

16/71

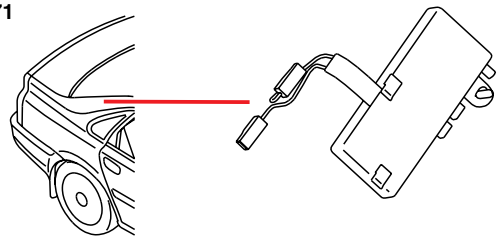

16/45

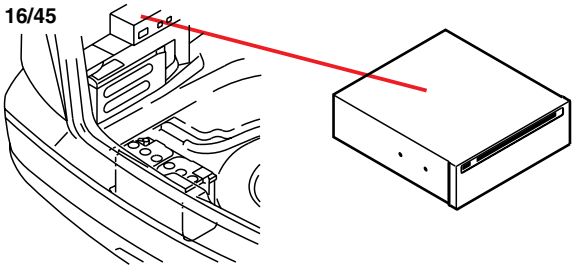

16/81A,B

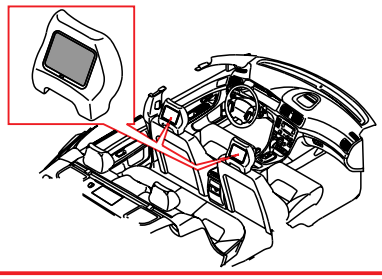

16/46

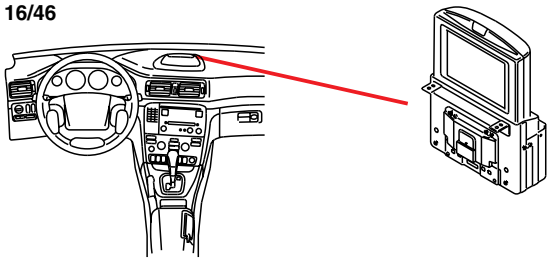

16/82

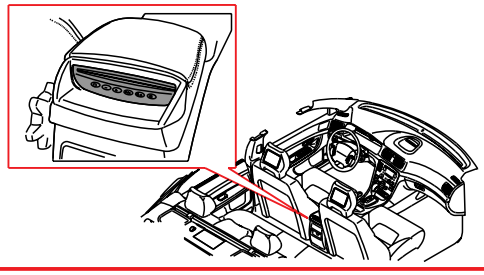

16/47

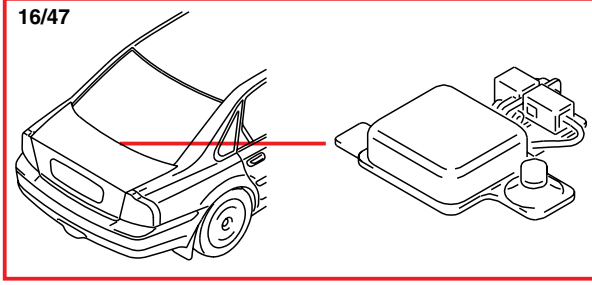

16/83

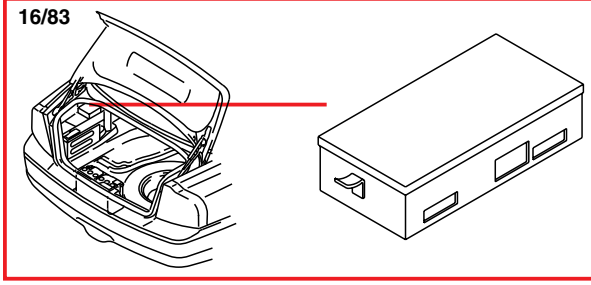

Component illustrations
16/122 - 54/36

16/122

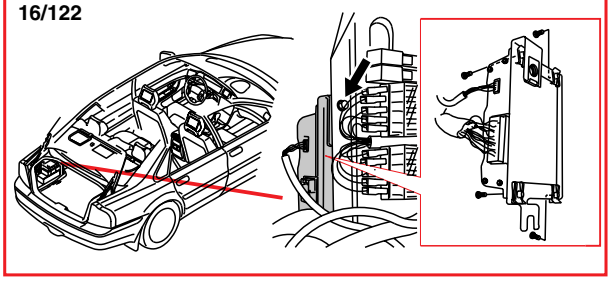

16/123

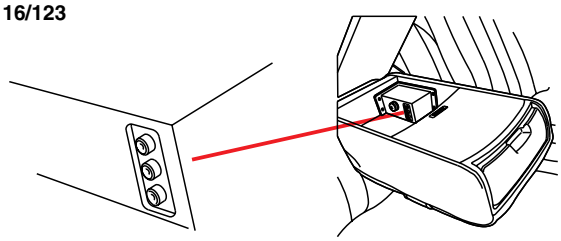

16/124

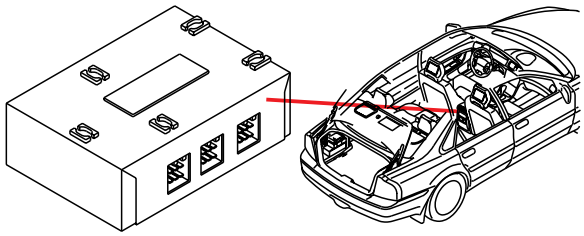

16/125

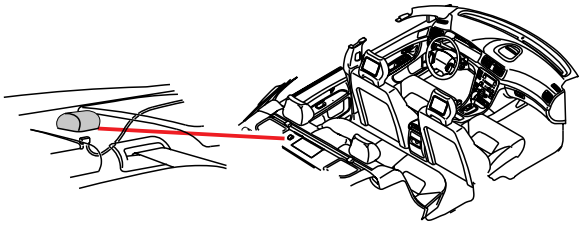

17/21

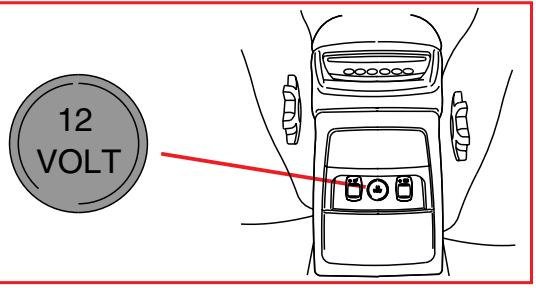

54/36

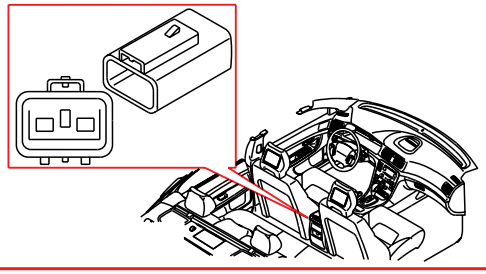

List of components
1/1 - 54 /no.

1/1	Battery
2/14	Relay, glow plug unit
2/17	Horn relay
2/22	Relay, climate control system
2/30	X feed overload relay
2/31	15-feed overload relay
2/32	Engine management system main relay
2/35	Starter motor relay
2/43	Heated rear seat relay
2/52	Relay, 15l feed, rear
2/61	Relay, parking light
2/74	Relay, coolant heater 1
2/82	Relay, heated rear window
2/90	Relay, windshield wiper, low/high speed
2/91	Relay, intermittent wiping
2/92	Relay, windshield washer motor
2/93	Relay, rear window washer motor
2/109	Relay, coolant heater 2
2/141	Relay 15l feed
3/1	Ignition switch
3/4	Cruise control switch SWS
3/64	Switch, heated rear seat
3/104	Sun shade switch
3/130	Steering Wheel Module SWM
3/131	Switch, audio/mobile phone
3/135	RTI switch
4/9	Control module, Supplemental Restraint System (SRS)
4/46	Engine Control Module ECM
4/55	Sun shade control module
4/56	Central Electronic Module CEM
6/74	Window antenna amplifier 2
7/66	Heater thermostat, LH rear seat
7/67	Heater thermostat, RH rear seat
8/80	M2D control module
9/1	Front 12V outlet
9/8	Seat cushion heating element, LH rear seat
9/9	Backrest heating element, LH rear seat
9/10	Seat cushion heating element, RH rear seat
9/11	Backrest heating element, RH rear seat
9/14	Right hand heated rear seat
9/15	Right-hand heated rear seat
9/24	Cooler, rear seat
9/37	12V outlet 75th Anniversary Edition
10/72	Front ashtray lighting
11A/no.	Main fuses in engine compartment fuse box
11B/no.	Fuses in engine compartment fuse box
11C/no.	Fuses in passenger compartment fuse box
11D/no.	Fuses in cargo compartment fuse box
11E/no.	Main fuses at battery
11F/no.	Fuses in cargo compartment for rear seat area
15/no.	Junction rail
16/9	Window antenna
16/15	CD changer
16/17	Left-hand speaker, rear shelf
16/18	Right-hand speaker, rear shelf
16/26	Speaker, dashboard center
16/36	TV receiver
16/45	RTI control module
16/46	RTI Display
16/47	GPS antenna RTI
16/48	CD player RTI
16/65	Antenna ring/ignition switch lighting
16/67	Amplifier antenna, bumper
16/68	Antenna, bumper
16/71	Window antenna amplifier (1) right
16/81	TV display, head restraint
16/82	DVD player, rear
16/83	Voice Guide Amplifier module (VGA)
16/122	Rear Audio Separation module (RAS)
16/123	External equipment outlet AUX
16/124	Rear Seat Entertainment module (RSE)
16/125	IR transmitter
17/17	Jump start connection
17/21	12V outlet, rear seat
20/16	Capacitor
20/27	Shunt, low beam CEM
31/no.	Ground connection
53/no.	Junction point
54/no.	Connector

How to use the wiring diagram

The descriptions below apply in general to all wiring diagram manuals, although not all sections are necessarily contained in this manual.

A. Component designation

Every component has a component designation that consists of two parts.

The first part is a type number that describes the type of component in question, for example 3/xx.

The second part of the designation is a serial number, for example, x/2.

Combined these give a component designation, for example, 3/2.

At the end of the manual is a list of components, where, with the help of the component designation, you can read off the name of the component, for example, 3/2 = light switch.

List of type numbers

The list shows which type of component that respective type numbers refer to, for example, 3/x = switch, 6/x = electric motor, etc.

1	Battery
2	Relay
3	Switch
4	Control module
5	Combined instrument panel
6	Electric motor
7	Sensor
8	Actuator
9	Heating element
10	Light
11	Fuse
15	Distribution rail
16	Audio
17	Service/diagnostics
18	Contact reel
19	Meter
20	Ignition component/shunt
31	Ground connection
53	Junction point
54	Connector

B. Junction points

The wiring diagrams contain numbered junction points, e.g. 53/352.

This manual contains a section with a list of junction points. This list shows all the components which are connected to each junction point.

The location of the junction points is shown in the "Cable harness routing in vehicle" section.

C. Connectors

Connectors provide a bridge between two cables harnesses and are described in the "Connectors" section.

D. Electrical distribution

Operation of the fuses and relays is shown in the "Electrical distribution" section.

E. Data communication

Today's cars are equipped with a CAN network, which transmits information. Connections to this network are shown in their entirety on the respective wiring diagrams. Complete information on CAN communication is can be found in the section titled "Data communication".

F. Abbreviations

A number of different abbreviations are used in the manual. These are explained in the section "Abbreviations".

G. Component location

There is a section at the end of the manual in which the appearance and location of components is described in numerical order.

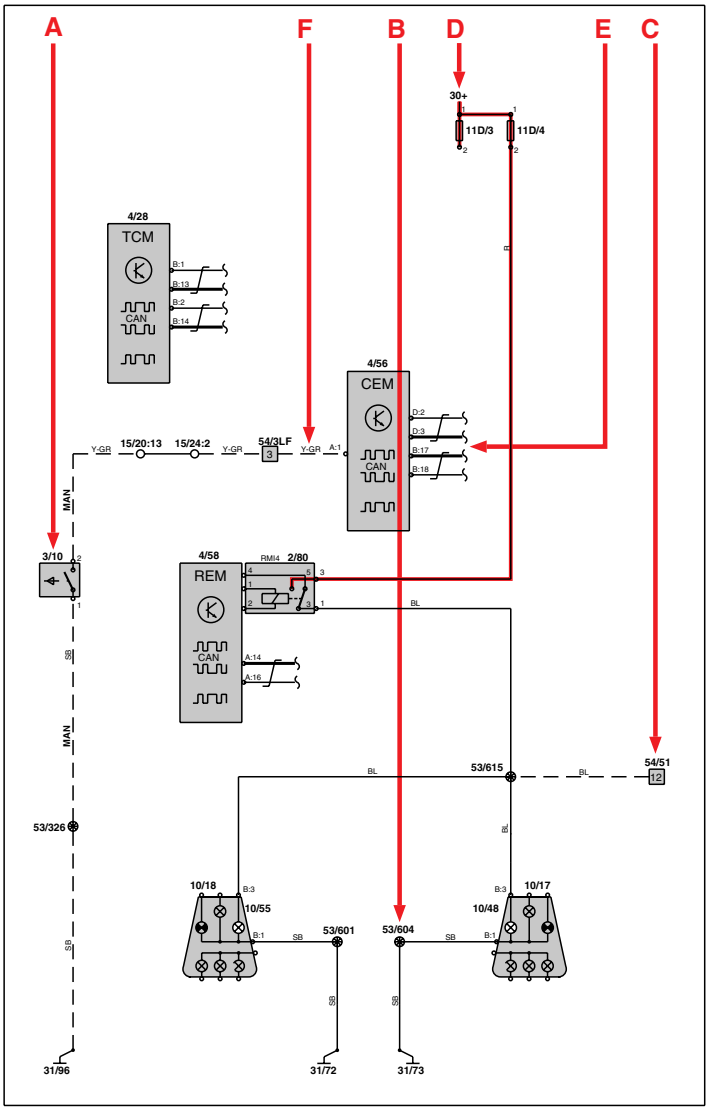

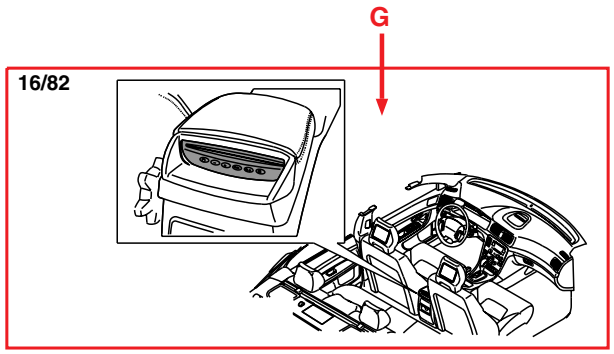

List of symbols

= System voltage

= Ground connection via wiring

= Ground connection on component/chassis

= Screened wire

= Junction point

= Twisted cable

= Electrical connection

= Variant

= CAN communication

= CAN high speed data signal (CAN H)

= CAN low speed data signal (CAN L)

= Serial communication

= DIN cable, coaxial cable, etc.

= Data communication

= CAN communication

= Connection with fuse box

= Further connection to...

= Connector between wiring harnesses

= Connector connected to component